ITEM	PART NO.	DESCRIPTION	QTY.
1	DG0669	GRATE: HEAVY DUTY BAR SS – 48.00"	3
2	DA0642S	LOCKING DEVICE	6
3	DP0608C	CLOSED INLET	1
4	DA0670F	CLOSED OUTLET (W/4" KNOCKOUT)	1
5	DA0633	INSTALLATION CHAIR	4
6	DA0620B	CHANNEL EDGE PROTECTOR SS – 48.00"	3PR
7	DP0610	CHANNEL SLOPED POLYCAST 600 – 48.00"	1
8	DP0609	CHANNEL SLOPED POLYCAST 600 – 48.00"	1
9	DP0608	CHANNEL SLOPED POLYCAST 600 – 48.00"	1
10	LIT–PC8	INSTALLATION MANUAL	1

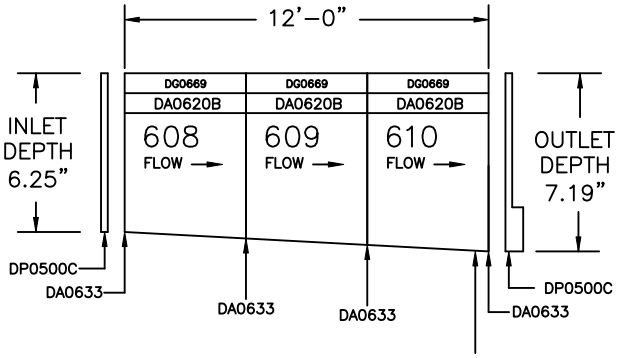

DRILL SIZE 3.50" FOR 3.0" SCH 40 & 80 PVC
DRILL SIZE 4.25" FOR 4.0" SCR–35 SEWER & DRAIN
DRILL SIZE 4.50" FOR 4.0" SCH 40 & 80 PVC

CUSTOMER APPROVAL

DATE: _____

NAME: _____

SIGNATURE: _____

I HAVE REVIEWED THE SYSTEM DIMENSIONS PROVIDED AND APPROVE TDS TO PROCEED WITH RELEASING FOR PRODUCTION. I UNDERSTAND THAT ONCE RELEASED FOR PRODUCTION, ANY REVISION WILL RESULT IN ADDITIONAL CHARGES.

CUSTOM ITEMS ARE NON–RETURNABLE

STANDARD CHAIR INSTALLATION

(SECURE CHAIR IN BOTTOM DIMPLES ON THE CHANNELS)

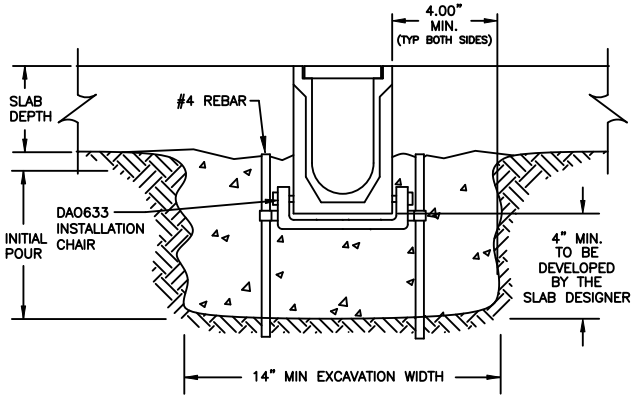

CHANNEL OUTLET DETAILS

(ALL END CAPS ARE TO BE SECURED WITH AN ADHESIVE)

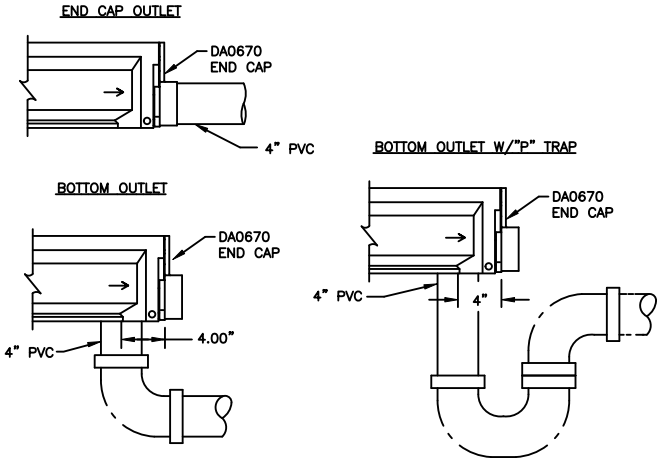

DISCLAIMER – THE CUSTOMER AND THE CUSTOMER'S ARCHITECTS, ENGINEERS, CONSULTANTS, AND OTHER PROFESSIONALS ARE COMPLETELY RESPONSIBLE FOR THE SELECTION INSTALLATION AND MAINTENANCE OF ANY PRODUCT PURCHASED FROM TRENCH DRAIN SYSTEMS AND/OR ITS MANUFACTURERS. TRENCH DRAIN SYSTEMS MAKES NO WARRANTY, EXPRESS OR IMPLIED, AS TO THE SUITABILITY, DESIGN, MERCHANTIBILITY, OR FITNESS OF THE PRODUCT FOR CUSTOMERS APPLICATION. THE DRAWING AND INFORMATION PROVIDED REMAIN THE PROPERTY AND COPYRIGHT OF THE MANUFACTURER LISTED. THE MANUFACTURER RESERVES THE RIGHT TO MODIFY SPECIFICATION WITHOUT NOTICE.

REV	DESCRIPTION	BY	DATE

TDS
TRENCH DRAIN SYSTEMS
PO BOX 377
FREMONT, OH 43420
610–638–1221

DRAWN: CJP
CHECKED:
DATE: 10.14.19

DESCRIPTION
POLYCAST 600
SYSTEM LENGTH; 12FT
SS EDGING – DG0669 GRATE

DWG. NO.
PCK6–DG0669–SS–12

DO NOT SCALE DRAWING | WEIGHT: 292# | SHEET 1 OF 1

PROPRIETARY AND CONFIDENTIAL; THE INFORMATION CONTAINED IN THIS DRAWING IS THE SOLE PROPERTY OF TDS. ANY REPRODUCTION IN PART OR WHOLE WITHOUT THE WRITTEN PERMISSION OF TDS IS PROHIBITED.