ITEM	PART NO.	DESCRIPTION	QTY.
1	DG0692	GRATE: PATRIOT CAST IRON 2FT	2
2	DA0542B	LOCKING DEVICE	2
3	DP0500C	END CAP – SOLID	2
4	DA0633	INSTALLATION CHAIR	2
5	DP0500	CHANNEL NEUTRAL POLYCAST 500 – 48.00"	1
6	LIT–PC8	INSTALLATION MANUAL	1

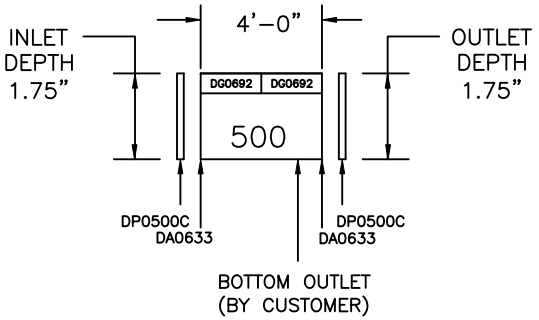

DRILL SIZE 3.50" FOR 3.0" SCH 40 & 80 PVC
DRILL SIZE 4.25" FOR 4.0" SCR–35 SEWER & DRAIN
DRILL SIZE 4.50" FOR 4.0" SCH 40 & 80 PVC

CUSTOMER APPROVAL

DATE: _____

NAME: _____

SIGNATURE: _____

I HAVE REVIEWED THE SYSTEM DIMENSIONS PROVIDED AND APPROVE TDS TO PROCEED WITH RELEASING FOR PRODUCTION. I UNDERSTAND THAT ONCE RELEASED FOR PRODUCTION, ANY REVISION WILL RESULT IN ADDITIONAL CHARGES.

CUSTOM ITEMS ARE NON–RETURNABLE

STANDARD CHAIR INSTALLATION

(SECURE CHAIR IN BOTTOM DIMPLES ON THE CHANNELS)

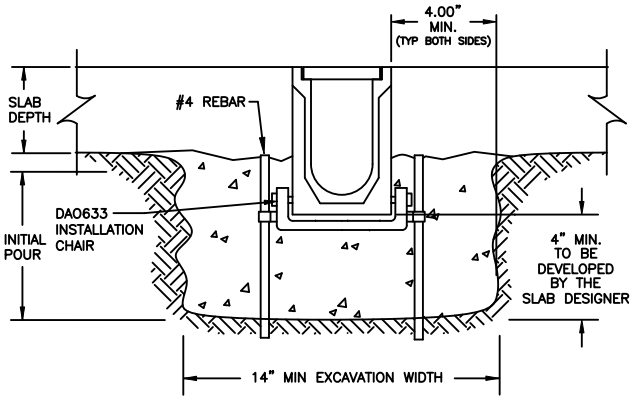

CHANNEL OUTLET DETAILS

(ALL END CAPS ARE TO BE SECURED WITH AN ADHESIVE)

BOTTOM OUTLET

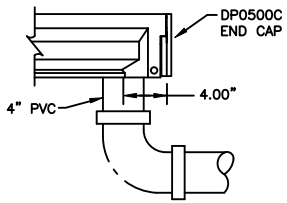

BOTTOM OUTLET W/"P" TRAP

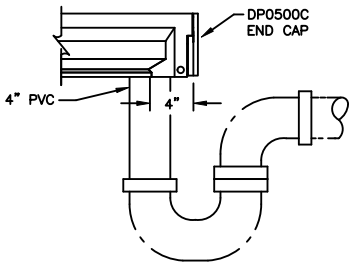

DISCLAIMER – THE CUSTOMER AND THE CUSTOMER'S ARCHITECTS, ENGINEERS, CONSULTANTS, AND OTHER PROFESSIONALS ARE COMPLETELY RESPONSIBLE FOR THE SELECTION INSTALLATION AND MAINTENANCE OF ANY PRODUCT PURCHASED FROM TRENCH DRAIN SYSTEMS AND/OR ITS MANUFACTURERS. TRENCH DRAIN SYSTEMS MAKES NO WARRANTY, EXPRESS OR IMPLIED, AS TO THE SUITABILITY, DESIGN, MERCHANTIBILITY, OR FITNESS OF THE PRODUCT FOR CUSTOMERS APPLICATION. THE DRAWING AND INFORMATION PROVIDED REMAIN THE PROPERTY AND COPYRIGHT OF THE MANUFACTURER LISTED. THE MANUFACTURER RESERVES THE RIGHT TO MODIFY SPECIFICATION WITHOUT NOTICE.

REV	DESCRIPTION	BY	DATE

TDS

TRENCH DRAIN SYSTEMS

PO BOX 377
FREMONT, OH 43420
610–638–1221

DRAWN: CJP
CHECKED:
DATE: 10.7.19

DESCRIPTION
POLYCAST 500
SYSTEM LENGTH; 4FT
DG0692 GRATE

DWG. NO.
PCK5–DG0692–04

DO NOT SCALE DRAWING | WEIGHT: 116# | SHEET 1 OF 1

PROPRIETARY AND CONFIDENTIAL; THE INFORMATION CONTAINED IN THIS DRAWING IS THE SOLE PROPERTY OF TDS. ANY REPRODUCTION IN PART OR WHOLE WITHOUT THE WRITTEN PERMISSION OF TDS IS PROHIBITED.