x3 Arrayed

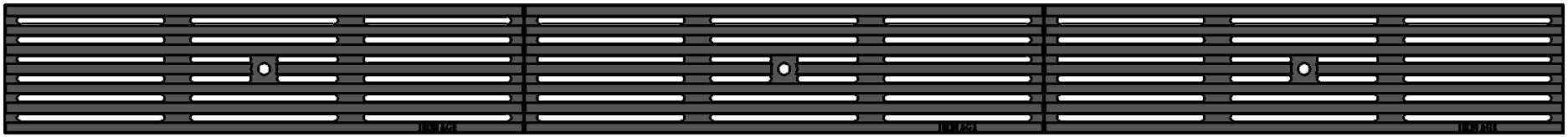

TOP

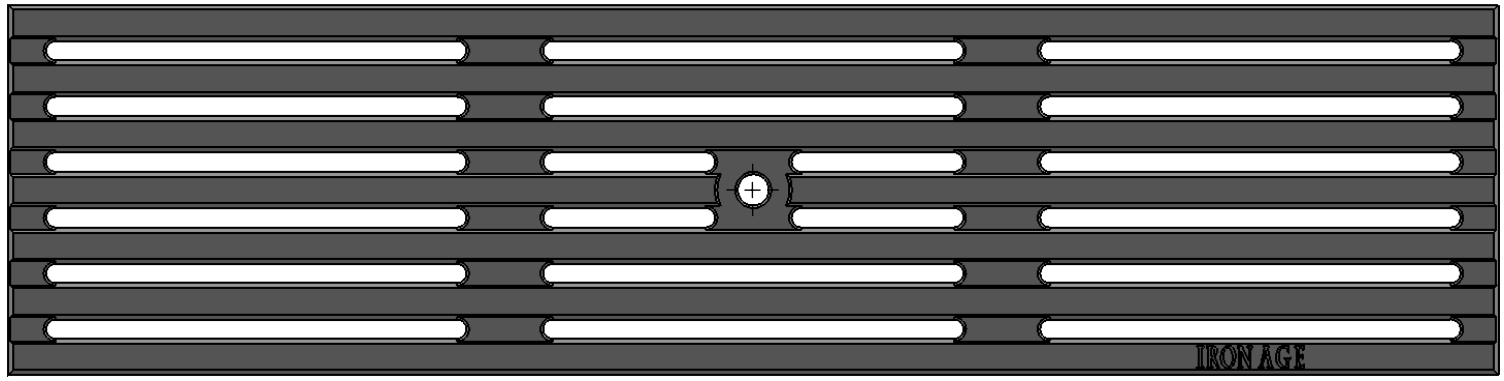

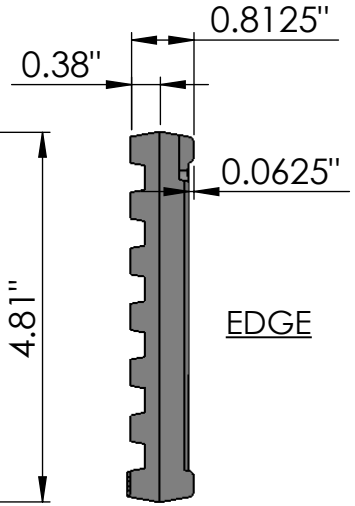

IRON AGE DESIGNS
2104 SW 152nd st #4 TEL 206.276.0925
Burien, WA 98166 FAX 206.257.0318
www.ironagegrates.com

Que 5x20 trench grate

JOB NO.

DWG. NO. QUE.I.5x20_Alum

Drawn by: JH
Date: 12/28/12
Scale: NTS

NOTES:

1. Material: cast ductile iron
2. Natural finish
3. Edge thickness: 7/8"
4. No openings greater than 1/4"
5. Weight approx. <12lbs
6. Fits drain bodies manufactured by: ACO™ KS100S, H80K, H100K
7. Due to casting inconsistencies all dimensions are nominal

© 2012 Iron Age Designs