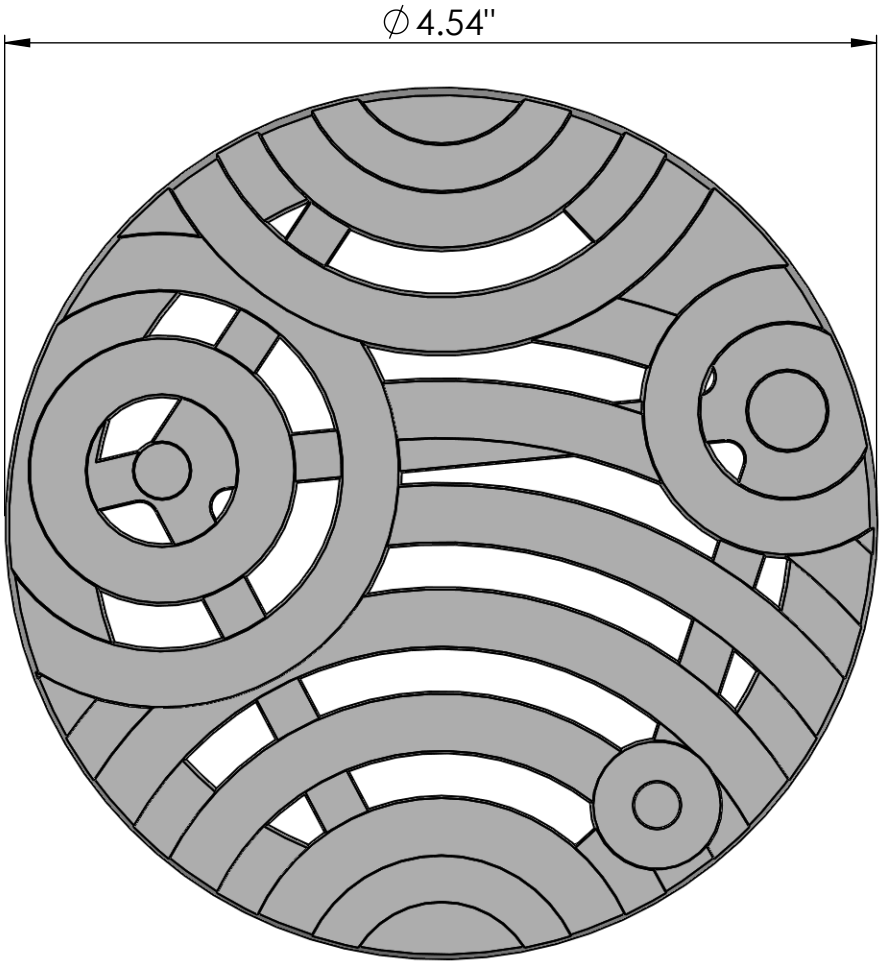

3" Standard PVC
Bell End

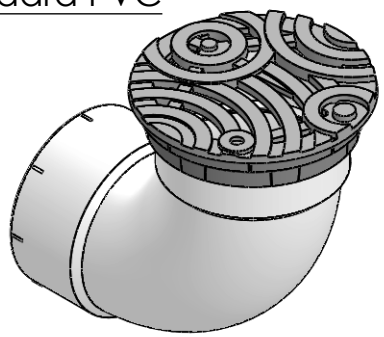

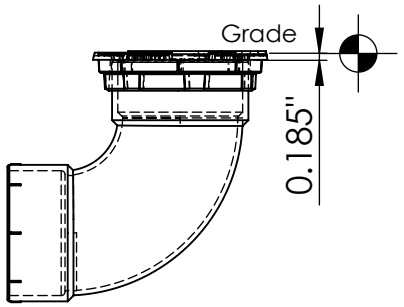

4" Standard PVC
Street End

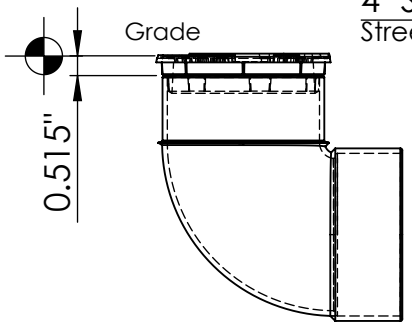

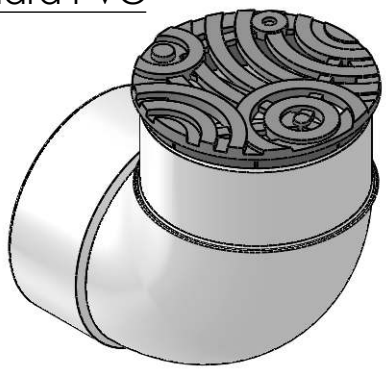

4" Standard PVC
Bell End

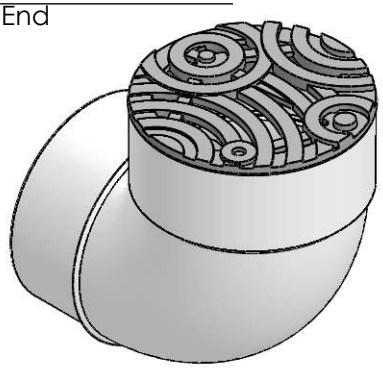

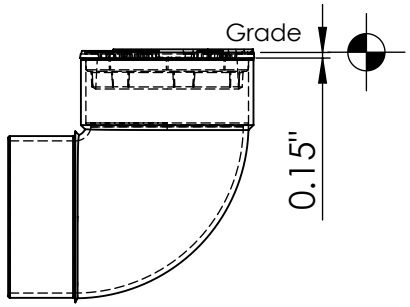

NOTES:

1. Material: cast iron
2. Baked on Oil finish
3. Fits SDR Pipe; 3"O.D. Bell End; 4"I.D.; 4"I.D. Bell End
4. Heelproof; No openings greater than 1/4"
5. Weight approx. 1 lb
6. Due to casting inconsistencies all dimensions are nominal

IRON AGE DESIGNS
2104 SW 152nd st #4 TEL 206.276.0925
Burien, WA 98166 FAX 206.257.0318
www.ironagegrates.com

Oblio 4"dia pipe cover

JOB NO. ...

DWG. NO. OBL.4in_pipe

Drawn by: JH
Date: 6/21/13
Scale: NTS

© 2011 Iron Age Designs